REVISIONS			
REV.	DESCRIPTION	DATE	APPROVED
A	RELEASED	1/27/2014	DS
B	WAS 19.88	1/7/16	DS

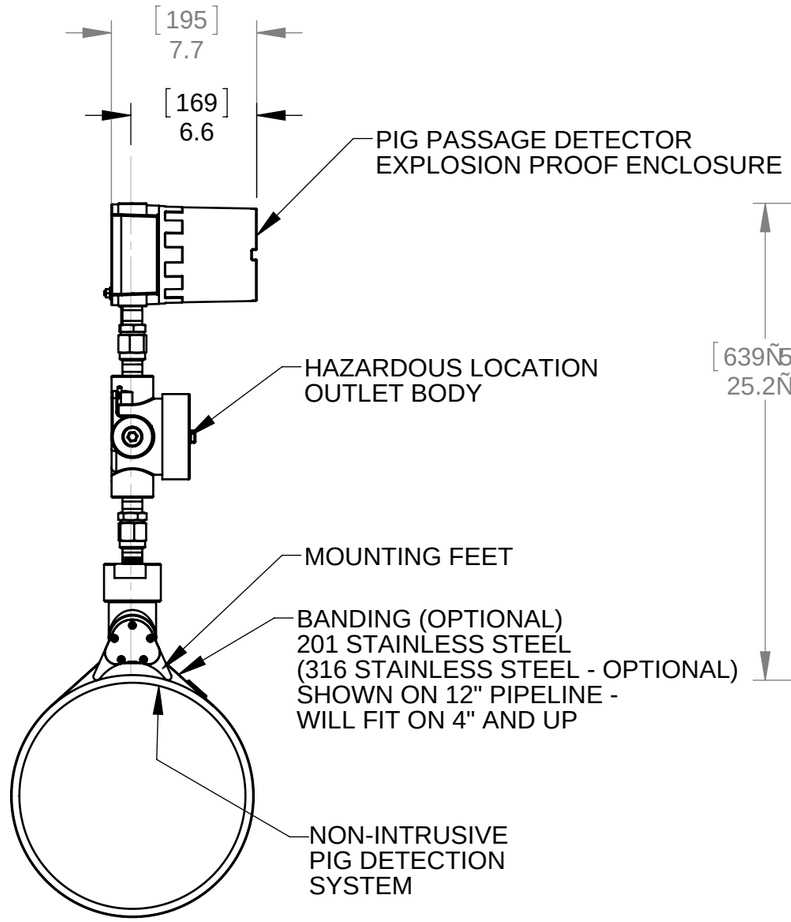

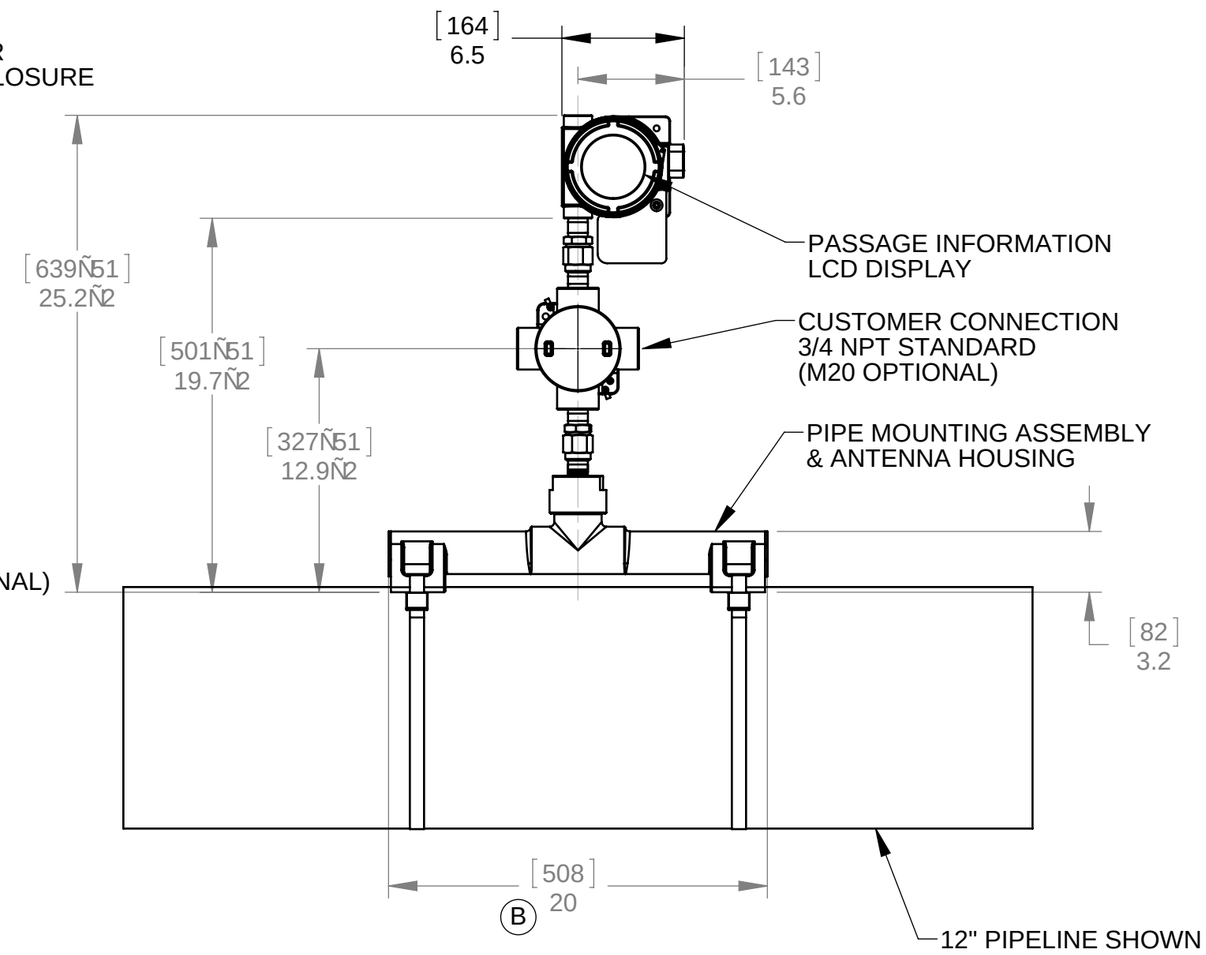

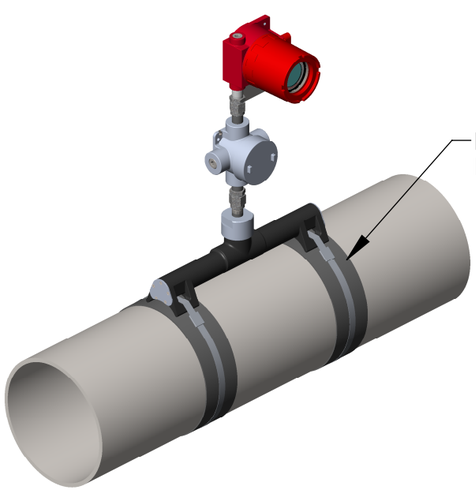

CATHODIC PROTECTION BASE MOUNTING

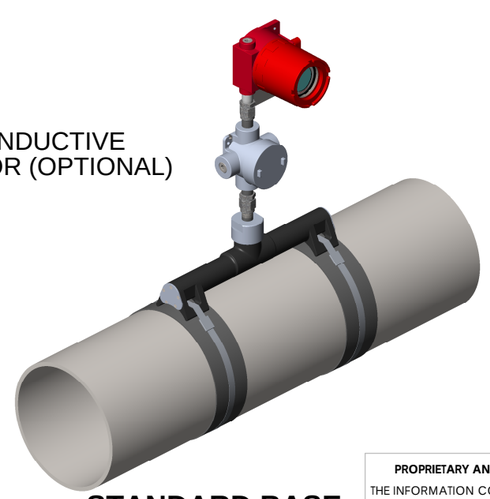

STANDARD BASE MOUNTING

NOTES:
1. DIMENSIONS ARE IN INCHES AND [MILLIMETERS].
2. UNIT WEIGHT: 28 LBS [13 KG].

PROPRIETARY AND CONFIDENTIAL

THE INFORMATION CONTAINED IN THIS DRAWING IS THE SOLE PROPERTY OF CDI. ANY REPRODUCTION IN PART OR AS A WHOLE WITHOUT THE WRITTEN PERMISSION OF CDI IS PROHIBITED.

NEXT ASSY	USED ON
APPLICATION	

UNLESS OTHERWISE SPECIFIED:
DIMENSIONS ARE IN INCHES
TOLERANCES:
FRACTIONAL ± 1/32
ANGULAR: ± 2°
TWO PLACE DECIMAL ± .03
THREE PLACE DECIMAL ± .010
INTERPRET GEOMETRIC TOLERANCING PER: ASME Y14.5M - 1994
MATERIAL
FINISH
DO NOT SCALE DRAWING

	NAME	DATE
DRAWN	GWY	12/28/15
CHECKED	DS	12/28/15
ENG APPR.	DS	1/7/16
MFG APPR.	JW	1/14/16
Q.A.	RB	12/29/15

COMMENTS:

ECR 12281501

CDI

TITLE:
GENERAL ARRANGEMENT, CD52 ATEX BANDIT

SIZE	DWG. NO.	REV
B	81-05-0080-XX-0-XXXE	B

SCALE: | WEIGHT: | SHEET 1 OF 1